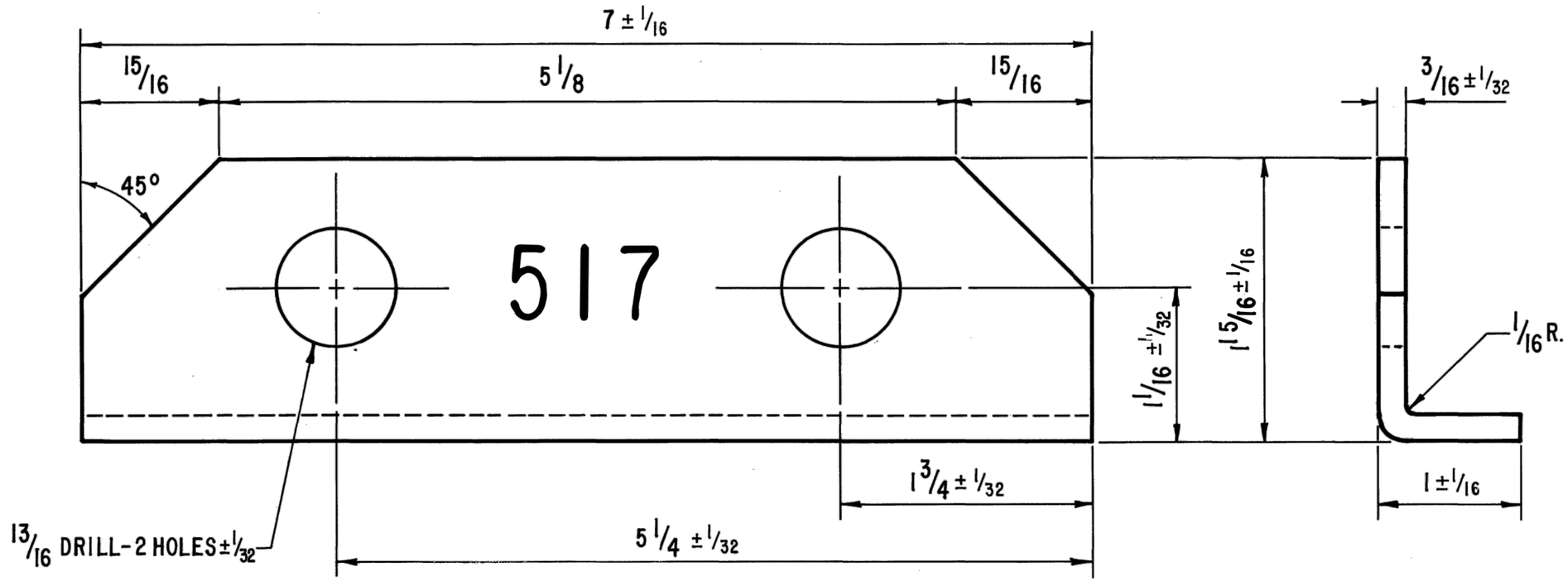

NOTES:

- ALL DIMENSIONS ARE IN INCHES.
- IDENTIFICATION CHARACTERS, 1/2" MIN. HEIGHT, TO BE STAMPED CLEARLY ON EACH ANGLE PLATE.
- SHARP EDGES AND BURRS OR OTHER FOREIGN MATTER SHALL BE REMOVED FROM ANGLE PLATE.

MATERIAL:

- PLATE TO CONFORM TO THE LATEST REVISION OF C.N.R. SPECIFICATION 150-1, CLASS C OR IN GENERAL WITH LATEST REVISION OF ASTM SPECIFICATION FOR COMMERCIAL QUALITY HOT ROLLED BAR STEEL A-107.

CHEMICAL REQUIREMENT:

	MIN.	MAX.
CARBON	0.15 %	0.25 %
MANGANESE	0.30 %	0.60 %
PHOSPHORUS		0.04 %
SULPHUR		0.05 %

METRIC CONVERSION: 1 inch=25.4mm, 1 foot=304.8mm

No.	Date	Revision	By Approved
1	18/07/27	ADDED IMPERIAL TO METRIC CONVERSION NOTE	

Standard

MILD STEEL
ANGLE PLATE
FOR INSULATED GAUGE PLATE

Drawn MRC Checked GWM Approved VP Engineering & Asset Management

METROLINX

Date DEC 15, 2017 Plan Number GTS-0517 Rev 1

REFERENCE: TS-517

Sheet 1 OF 1