CONCRETE SPECIFICATIONS

1. PERFORMANCE REQUIREMENTS
   (a) Concrete to remain serviceable when exposed to:
      (i) freeze–thaw cycles
      (ii) de–icing chemicals
      (iii) contact with soil composed of SO4 > 2 %
      (iv) soil retention forces and pedestrian and service vehicular traffic pattern loading
   (b) Concrete to be highly durable.
   (c) Concrete to be ultra–low in permeability.

2. EXPOSURE CLASS
(a) Concrete to be Exposure Class C–1.

3. TECHNICAL REQUIREMENTS
   (a) Minimum compressive strength of 35 MPa at 28 days
   (b) Concrete quality and proportioning to CSA A23.1/A23.2–09 or latest version, and the following requirements:
(i) Cement to be "Portland Cement" to CSA Standard CAN3–A5–M77 or latest version. Concrete to contain a minimum cement content of 365 kg per cubic metre of concrete.
(ii) Supplementary cementing material to be silica fume. Maximum silica fume content to be 10% of the total cement volume by weight.
(iii) Maximum aggregate size to be 20mm.
(iv) Ratio of water to cementing materials not to exceed 0.40.
(v) Concrete to contain an approved non–retarding water reducing agent and an approved compatible air entraining agent to CSA A23.1/A23.2–09 or latest version, both of which to be added in accordance with Manufacturer's recommendations.
(vi) Air content range to be between 5% and 8%.
(vii) Slump at point of discharge to be 75mm +/– 25mm.
(viii) Concrete to include a crystalline water proofing admixture at a rate of 2% to 3% of the total cementitious content in accordance with the Manufacturer's recommendations. Use Admix C–1000 by Xypex, Krystol Internal Membrane (KIM) by Kryton, or approved alternate.
(ix) The use of Chlorides in admixtures is Not Permitted.

4. FINISH
(a) Top surface of Cap Piece to be finished to accept detectible tile installation.

5. SAMPLING AND TESTING REQUIREMENTS
(a) Sampling and testing of all materials will be performed by a qualified independent testing agency with a minimum of 15 years of experience working with pre–cast silica fume concrete structures.
(b) A copy of mix designs, sieve analysis and specific gravity of aggregates with report from testing agency will be submitted to the Engineer for review. Tests to be conducted include:
(i) Rapid freezing and thawing.
(ii) De–Icer salt scaling
(iii) Compressive strength
(iv) Water permeability

NOTE:
THIS DRAWING IS PROVIDED FOR INSTRUCTIONAL DESIGN PURPOSES ONLY BASED ON METROLINX GO TRANSIT DESIGN GUIDELINES AND REQUIREMENTS. THE CONSULTANT SHALL VERIFY FOR LOCAL CODE COMPLIANCE, EXISTING SITE CONDITIONS AND INTER DISCIPLINARY DRAWING COORDINATION. ALL DIMENSIONS AND SPECIFICATIONS SHOULD BE VERIFIED BY CONSULTANT AND/OR CONTRACTOR BEFORE ACTUAL CONSTRUCTION BEGINS.

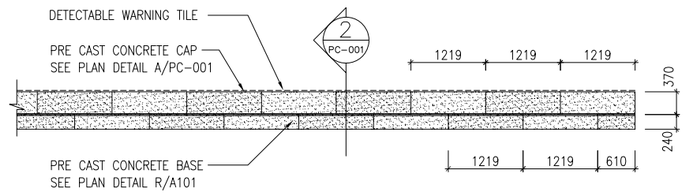

PART PLATFORM ELEVATION AT RAIL SIDE (1 PC–001)
SCALE 1:25
NOTE: INSTALLATION DETAILS FOR REFERENCE PURPOSES

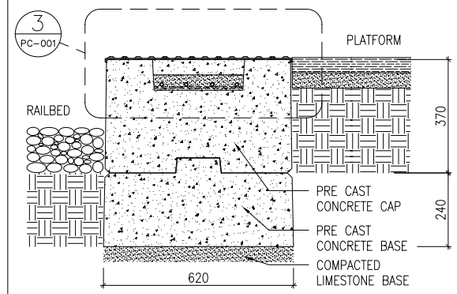

ASSEMBLED PLATFORM SECTION (2 PC–001)
SCALE 1:10
NOTE: INSTALLATION DETAILS FOR REFERENCE PURPOSES

NOTE: DETECTABLE TILE DESIGN AND INSTALLATION TO MEET REQUIREMENTS OF OBC AND ACCESSIBILITY FOR ONTARIANS WITH DISABILITIES ACT (AODA). LATEST VERSION.

METRIC

ALL DIMENSIONS SHOWN ARE IN METRES AND/OR MILLIMETRES UNLESS OTHERWISE NOTED.

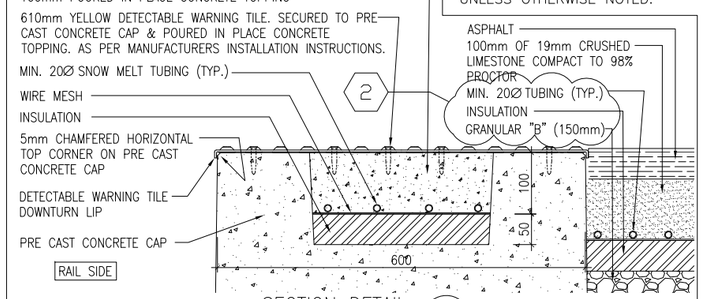

SECTION DETAIL (3 PC–001)
SCALE 1:5
NOTE: INSTALLATION DETAILS FOR REFERENCE PURPOSES

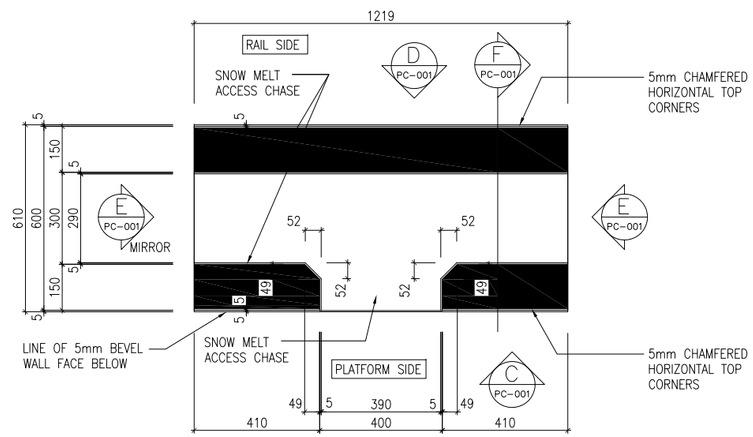

PLAN TOP VIEW (CAP) (A PC–001)
SCALE 1:10

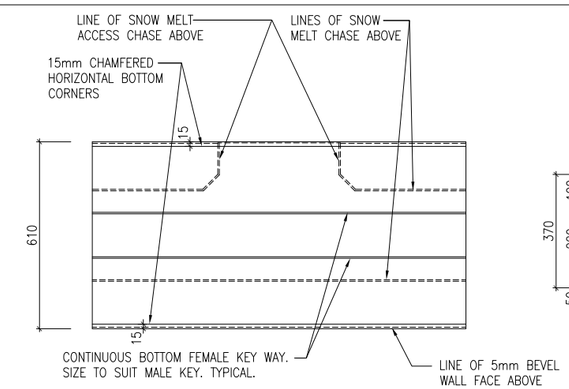

PLAN BOTTOM VIEW (CAP) (B PC–001)
SCALE 1:10

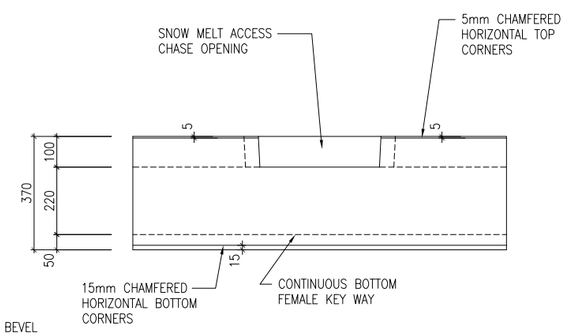

PLATFORM SIDE ELEVATION (CAP) (C PC–001)
SCALE 1:10

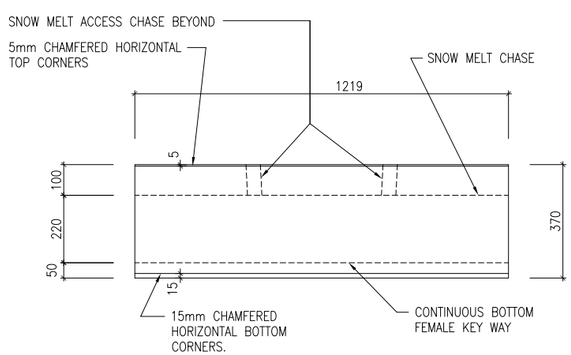

RAIL SIDE ELEVATION (CAP) (D PC–001)
SCALE 1:10

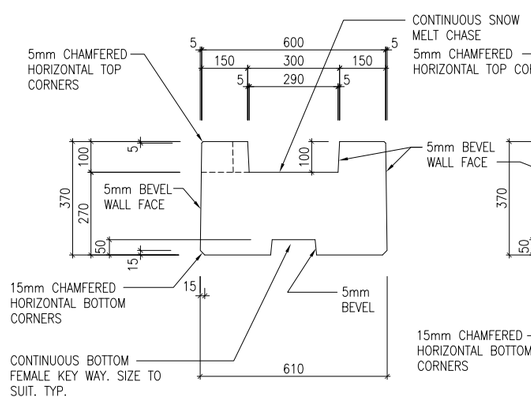

END ELEVATION (CAP) (E PC–001)
SCALE 1:10

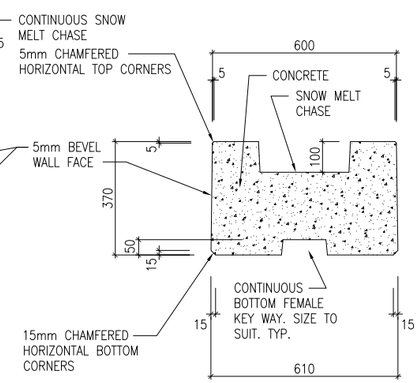

SECTION (CAP) (F PC–001)
SCALE 1:10

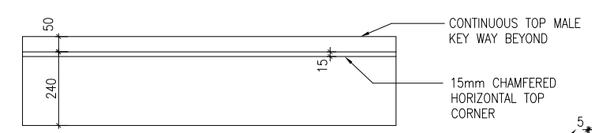

SIDE VIEW (BASE) (T PC–001)
SCALE 1:10

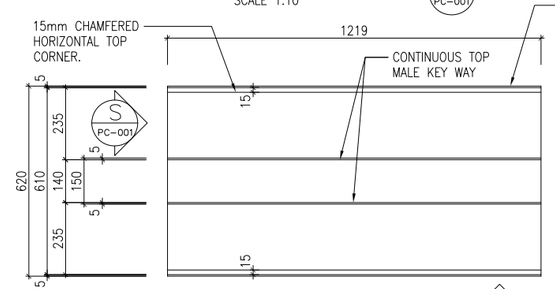

PLAN TOP VIEW (BASE) (R PC–001) (T PC–001)
SCALE 1:10

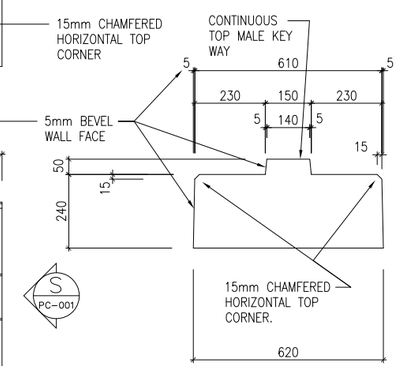

END ELEVATION (BASE) (S PC–001)
SCALE 1:10

GENERAL NOTE:
DO NOT SCALE THESE DRAWINGS. ANY ERROR OR DISCREPANCY IS TO BE REPORTED IMMEDIATELY TO: FE&AM OFFICE

METROLINX PROJECT NO.

REFERENCE DRAWINGS		ISSUE			REVISIONS		
					02	22.02.14	SECTION 3 UPDATE TO MATCH M–402
DWG NO.	TITLE	REV.	DATE	ISSUED FOR	REV.	DATE	

DRAWN BY: | DESIGNED BY:
CHECKED BY: | APPROVED BY:
SCALE: 1:10 FULL SIZE ONLY
0 100 300 / 1:10 200 400mm

METROLINX

NEW TACTILE TILE INSTALLATION ON NEW RAIL PLATFORM CURB

PLANS, ELEVATIONS & SECTIONS

CONTRACT NO.	DWG. NO.	REV.	SHEET
	PC–001	02	